PETERMANN TECHNIK
your clocking experts

PETERMANN-TECHNIK GmbH
Lechwiesenstr. 13 • D-86899 • Landsberg am Lech
Tel: +49/8191/305395 • Fax: +49/8191/305397
info@petermann-technik.com • www.petermann-technik.com

MINIATURE LOW POWER SMD OSCILLATOR

SERIES "LPXO"

FEATURES

+ High reliability for low cost
+ Cheapest available SMD-LPXO
+ Available in 1.8, 2.6, 2.8, 3.0 and 3.3 VDC (1.7-3.5 VDC)
+ New standard for low cost SMD-LPXOs
+ Qualified for automotive applications
+ Extended temperature range to -40/+85°C available

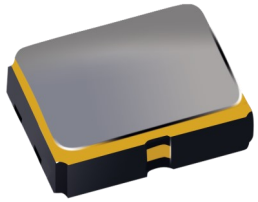

PB FREE / ROHS-2 2011/65/EU COMPLIANT

GENERAL DATA

PARAMETERS		PRODUCT FEATURES AND CONDITIONS
SMD-OSCILLATOR SERIES		LPXO
PACKAGE	LPXO1612	1.6 x 1.2 x 0.5 mm³
	LPXO2016	2.0 x 1.6 x 0.7 mm³
	LPXO2520	2.5 x 2.0 x 0.8 mm³
	LPXO3225	3.2 x 2.5 x 0.9 mm³
FREQUENCY RANGE	LPXO1612	16.0 ~ 60.0 MHz
	LPXO2016	12.288 ~ 52.0 MHz
	LPXO2520	9.6 ~ 52.0 MHz
	LPXO3225	9.6 ~ 52.0 MHz
OPERATING TEMPERATURE RANGE		0/+70°C ~ -40/+85°C
STORAGE TEMPERATURE RANGE		-55/+125°C
STANDARD FREQUENCY		19.2 / 20 / 25 / 26 / 30 / 32 / 38.4 / 40 / 52 MHz
SUPPLY VOLTAGE (VDD)		+1.8V / +2.6V / +2.8V / +3.0V / +3.3V
CURRENT CONSUMPTION		+1.5mA max.(f≤26 MHz)/+2.0mA max.(26<f≤52 MHz)/+2.5mA max.(f≤60 MHz)
STAND-BY CURRENT		+3.0 µA max. if Enable/Disable function is required
OUTPUT LEVEL		0.8 Vp-p min. (f≤52 MHz) (Clipped Sinewave / DC-coupled)
OUTPUT LOAD		10kΩ // 10pF
FREQUENCY STABILITY	INITIAL TOLERANCE	± 1.5 ppm max. (after 2 reflows)
	VS. TEMPERATURE	±0.5ppm, ±1.0ppm, ± 2.0 ppm, ± 2.5ppm max. /-30~+85°C ±0.5ppm, ±1.0ppm, ± 2.0 ppm, ± 2.5 ppm max. / -40~+85°C Other parameters are available on request
	VS. SUPPLY VOLTAGE	± 0.2 ppm max. (VDD±5%)
	VS. LOAD VARIATION	± 0.2 ppm max. (10kΩ // 10pF±10%)
	VS. AGING	±1.0 ppm max. / year (ref. +25°C)
Start-up Time		2.0 ms max.
PIN 1		Standard version without enable/disable function Optionally deliverable with enable/disable function (see ordering code)
Phase Noise		[f ≤ 26MHz] [26<f≤40MHz] [40MHz<f≤52MHz]
Offset 100Hz		-115dBc/Hz 110dBc/Hz 105dBc/Hz
Offset 1kHz		-135dBc/Hz 135dBc/Hz 130dBc/Hz
Offste 10kHz		-150dBc/Hz 150dBc/Hz 145dBc/Hz
Offset 100kHz		-155dBc/Hz 155dBc/Hz 150dBc/Hz
DELIVERY FORM		Tape and Reel / 2.000 pcs. per reel, other quantities are available on request
OTHER PARAMETERS ARE AVAILABLE ON REQUEST / CREATE HERE YOUR SPECIFICATION		

PETERMANN-TECHNIK GmbH
Lechwiesenstr. 13 • D-86899 • Landsberg am Lech
Tel: +49/8191/305395 • Fax: +49/8191/305397
info@petermann-technik.com • www.petermann-technik.com

OUTLINE DRAWING OF LPXO1612

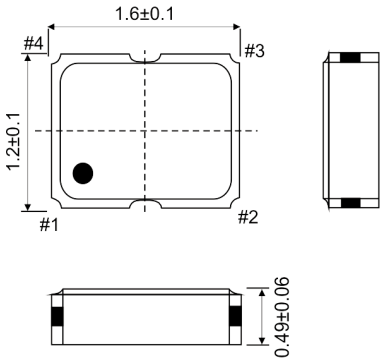

PIN	CONNECTION
#1	GROUND OR E/D
#2	GROUND
#3	OUTPUT
#4	VDD

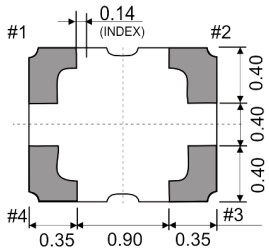

Recommended Land Pattern
(Top View)

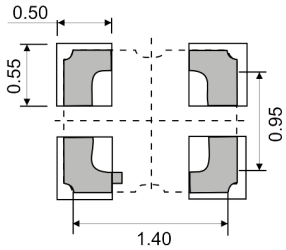

Unit:mm

OUTLINE DRAWING OF LPXO2016

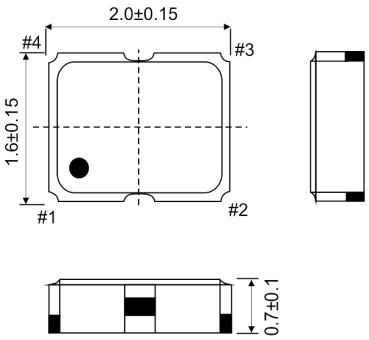

PIN	CONNECTION
#1	GROUND OR E/D
#2	GROUND
#3	OUTPUT
#4	VDD

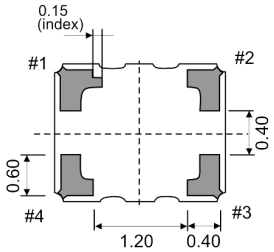

Recommended Land Pattern
(Top View)

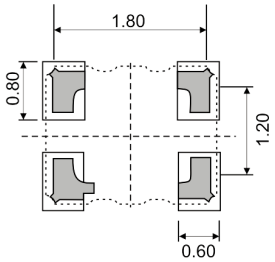

OUTLINE DRAWING OF LPXO2520

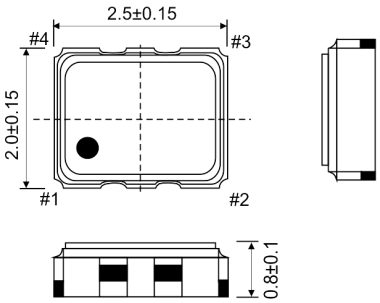

PIN	CONNECTION
#1	GROUND OR E/D
#2	GROUND
#3	OUTPUT
#4	VDD

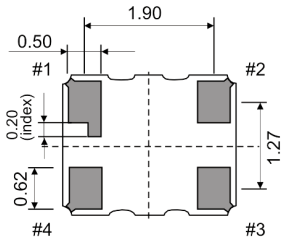

Recommended Land Pattern
(Top View)

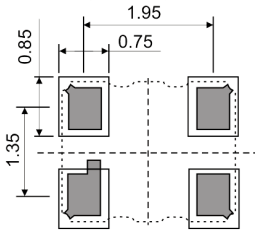

Unit:mm

PETERMANN-TECHNIK GmbH
Lechwiesenstr. 13 • D-86899 • Landsberg am Lech
Tel: +49/8191/305395 • Fax: +49/8191/305397
info@petermann-technik.com • www.petermann-technik.com

OUTLINE DRAWING OF LPXO3225

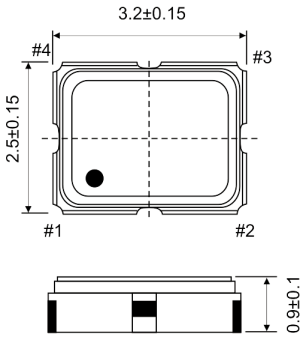

PIN	CONNECTION
#1	GROUND OR E/D
#2	GROUND
#3	OUTPUT
#4	VDD

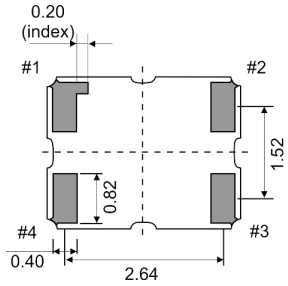

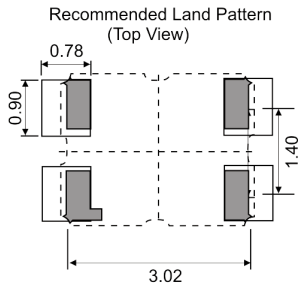

Unit:mm

MEASUREMENT CIRCUIT WITHOUT E/D FUNCTION (GROUND)

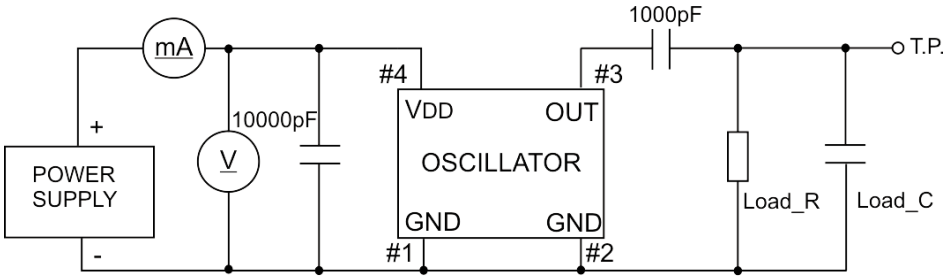

Load_R=10kΩ
Load_C=10pF (Include Jig stray capacitance)

MEASUREMENT CIRCUIT WITH E/D FUNCTION

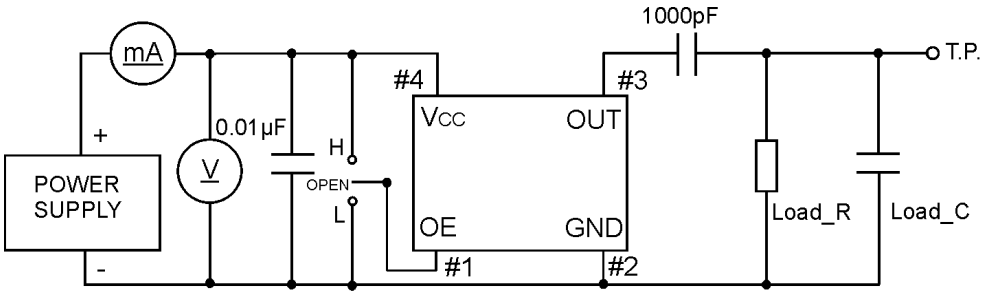

Output Enable
H = Oscillation
OPEN Oscillation
L = Standby

Load_R 10kΩ
Load_C 10pF (Include Jig stray capacitance)

PETERMANN-TECHNIK GmbH
Lechwiesenstr. 13 • D-86899 • Landsberg am Lech
Tel: +49/8191/305395 • Fax: +49/8191/305397
info@petermann-technik.com • www.petermann-technik.com

REFLOW SOLDER PROFILE

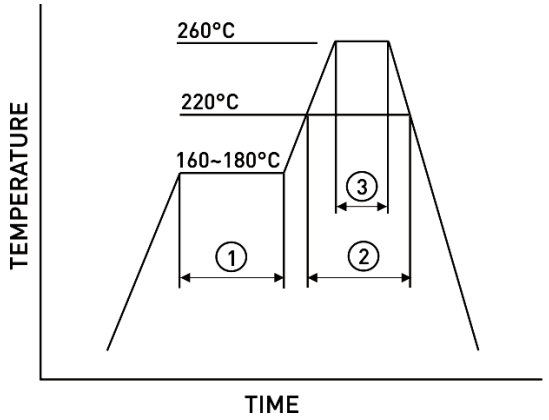

1	Preheat	160~180°C	120sec.
2	Primery heat	220°C	60sec.
3	Peak	260°C	10sec. max.

REEL SPECIFICATION OF LPXO1612

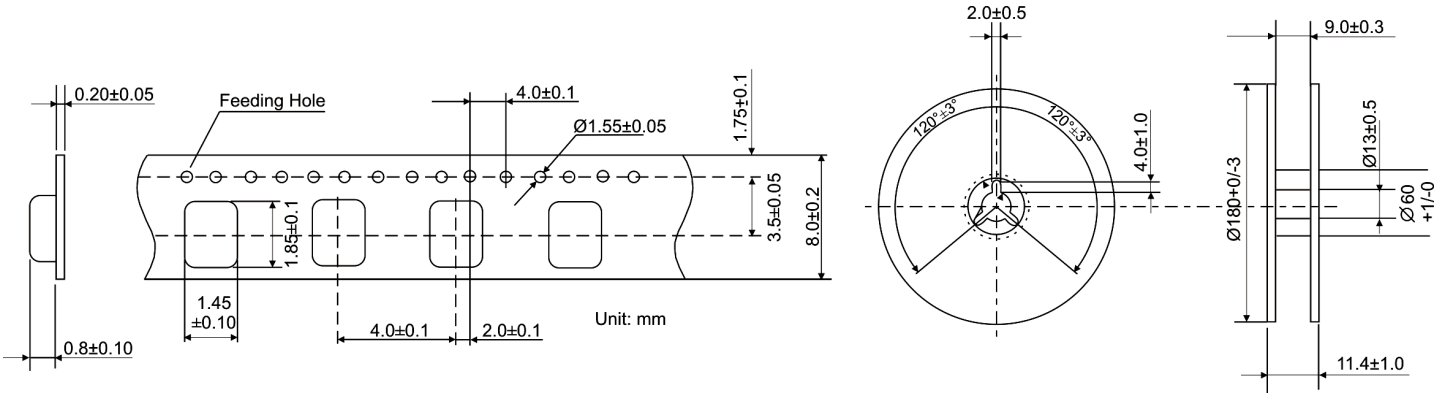

REEL SPECIFICATION OF LPXO2016

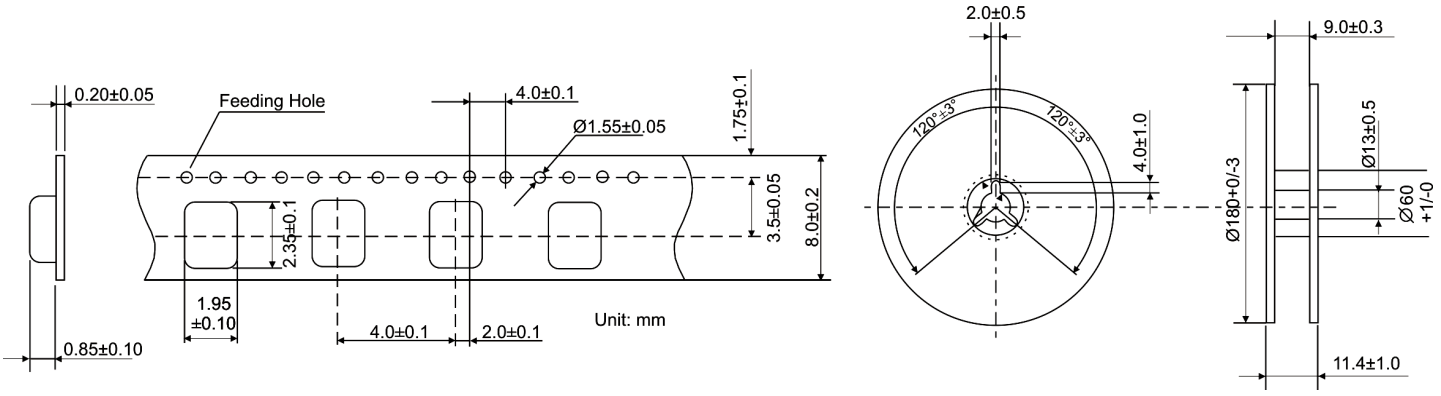

PETERMANN-TECHNIK GmbH
Lechwiesenstr. 13 • D-86899 • Landsberg am Lech
Tel: +49/8191/305395 • Fax: +49/8191/305397
info@petermann-technik.com • www.petermann-technik.com

REEL SPECIFICATION OF LPXO2520

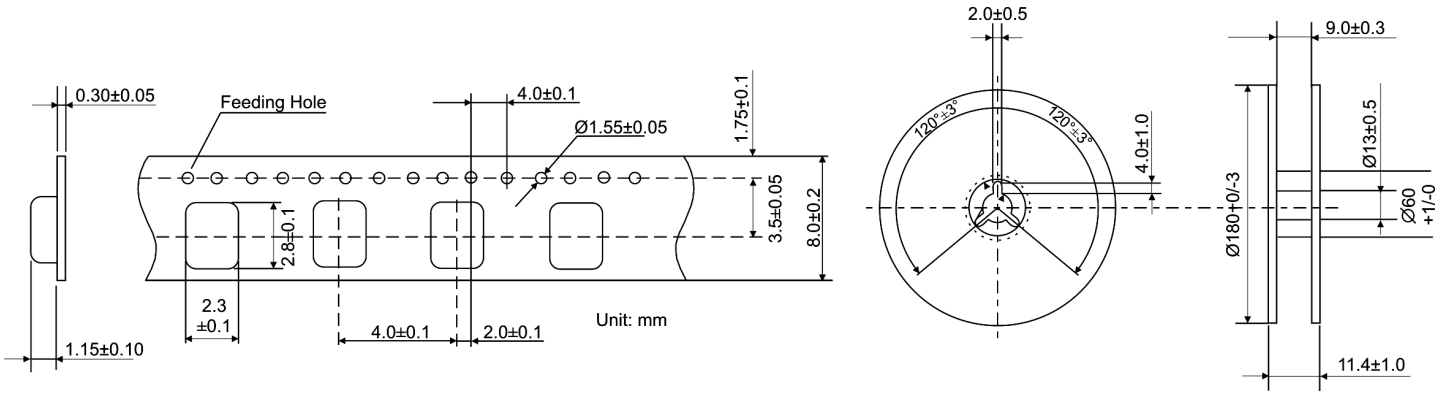

REEL SPECIFICATION OF LPXO3225

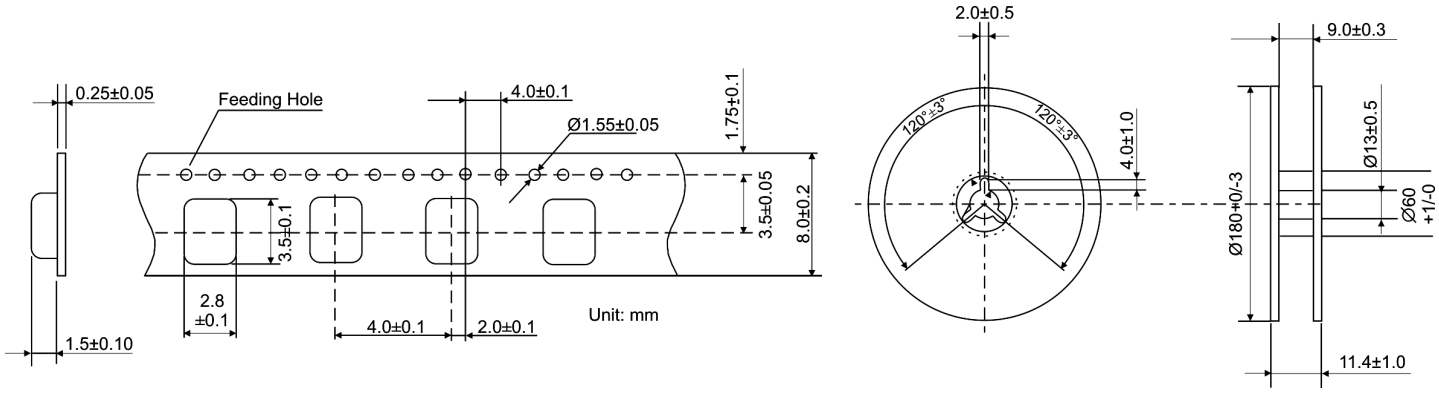

PETERMANN-TECHNIK GmbH
Lechwiesenstr. 13 • D-86899 • Landsberg am Lech
Tel: +49/8191/305395 • Fax: +49/8191/305397
info@petermann-technik.com • www.petermann-technik.com

ORDERING INFORMATION WITHOUT E/D FUNCTION

SERIES
LPXO1612
LPXO2016
LPXO2520
LPXO3225

SUPPLY VOLTAGE
33/ 30/ 28/ 26/ 18

TEMPERATURE RANGE
W=-40°/+85°C
K=-30°/+85°C
M=-20°/+70°C
BLANK= 0°/+70°C

FREQUENCY
32.000MHz
or ON REQUEST

OUTPUT SIGNAL
Clipped Sinewave

LPXO2520-18-2.5-W-32M-1-CSW

TEMPERATURE STABILITY
0.5=±0.5 PPM
1.0=±1.0 PPM
2.0=±2.0 PPM
2.5=±2.5 PPM
or ON REQUEST

AGING
1=±1.0 ppm max.
per year

EXAMPLE: LPXO2520-18-2.5-W-32M-1-CSW

PLEASE INDICATE YOUR REQUIRED PARAMETERS

PETERMANN-TECHNIK GmbH
Lechwiesenstr. 13 • D-86899 • Landsberg am Lech
Tel: +49/8191/305395 • Fax: +49/8191/305397
info@petermann-technik.com • www.petermann-technik.com

ORDERING INFORMATION WITH E/D FUNCTION

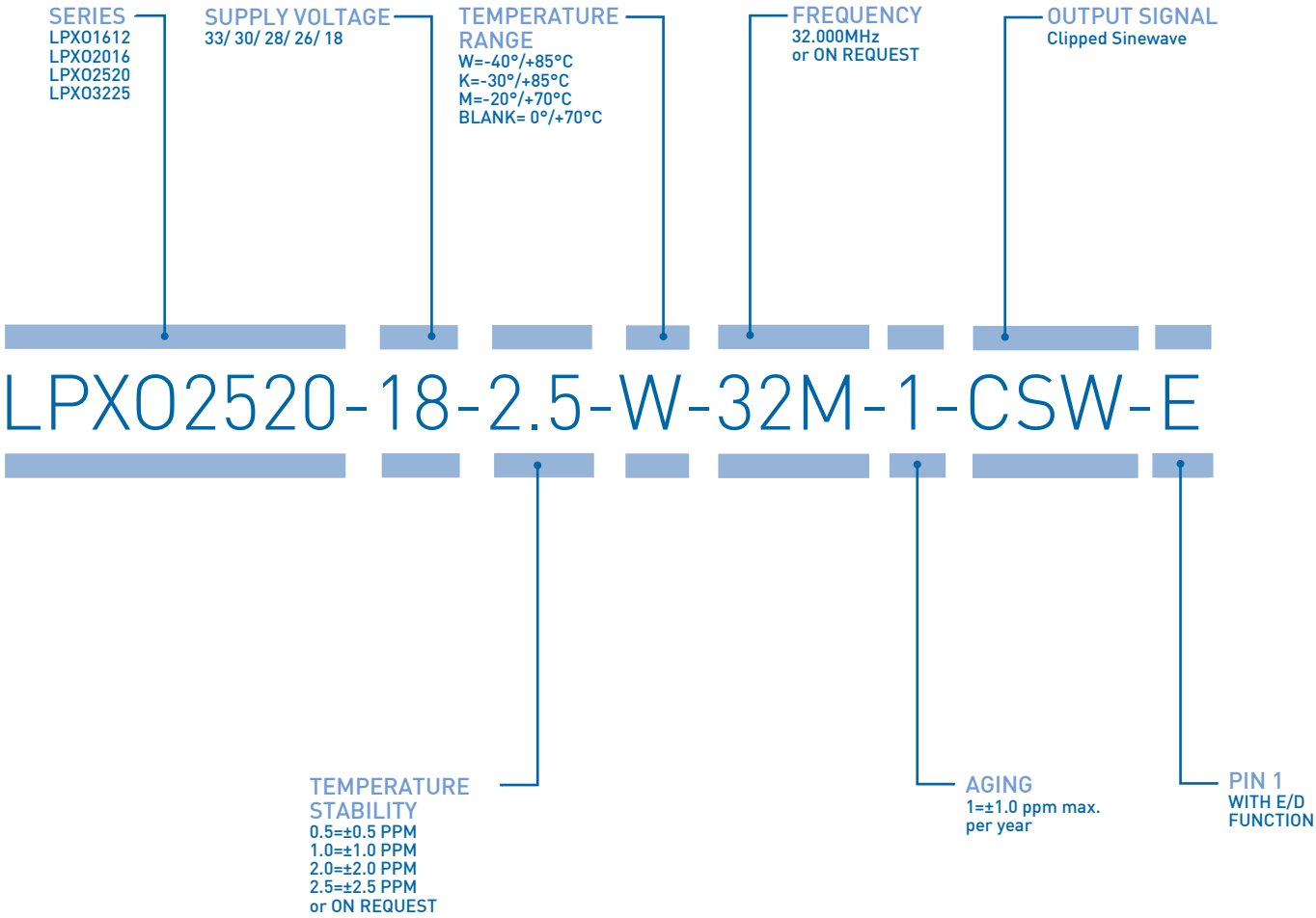

EXAMPLE: LPXO2520-18-2.5-W-32M-1-CSW-E

PLEASE INDICATE YOUR REQUIRED PARAMETERS

REVISION HISTORY[1]

VERSION	RELEASE DATE	AMENDMENTS SUMMARY
01	June 2017	+ Added stand-by current + Added Pin 1 options + Added measurement circuit without and with E/D function + Revised outline drawings + Revised ordering information + Added temperature stabilities

Note:

1. Based on Datasheet version from October 2016/SPEC 01/REV.00

PETERMANN-TECHNIK GmbH
Lechwiesenstr. 13 • D-86899 • Landsberg am Lech
Tel: +49/8191/305395 • Fax: +49/8191/305397
info@petermann-technik.com • www.petermann-technik.com

PREMIUM QUALITY BY PETERMANN-TECHNIK

DMSZ
certified according to
ISO 9001
QM 00886

OUR COMPANY IS CERTIFIED ACCORDING TO ISO 9001:2015 IN OCTOBER 2016 BY THE DMSZ CERTIFIKATION GMBH.

THIS IS FOR YOU TO ENSURE THAT THE PRINCIPLES OF QUALITY MANAGEMENT ARE FULLY IMPLEMENTED IN OUR QUALITY MANAGEMENT SYSTEM AND QUALITY CONTROL METHODS ALSO DOMINATE OUR QUALITY STANDARDS.

© PETERMANN-TECHNIK GmbH 2017. The information contained herein is subject to change at any time without notice. PETERMANN-TECHNIK owns all rights, title and interest to the intellectual property related to PETERMANN-TECHNIK's products, including any software, firmware, copyright, patent, or trademark. The sale of PETERMANN-TECHNIK products does not convey or imply any license under patent or other rights. PETERMANN-TECHNIK retains the copyright and trademark rights in all documents, catalogs and plans supplied pursuant to or ancillary to the sale of products or services by PETERMANN-TECHNIK. Unless otherwise agreed to in writing by PETERMANN-TECHNIK, any reproduction, modification, translation, compilation, or representation of this material shall be strictly prohibited.